DeviceNet Fieldbus Coupler

125 ... 500 Kbaud; digital and analog signals

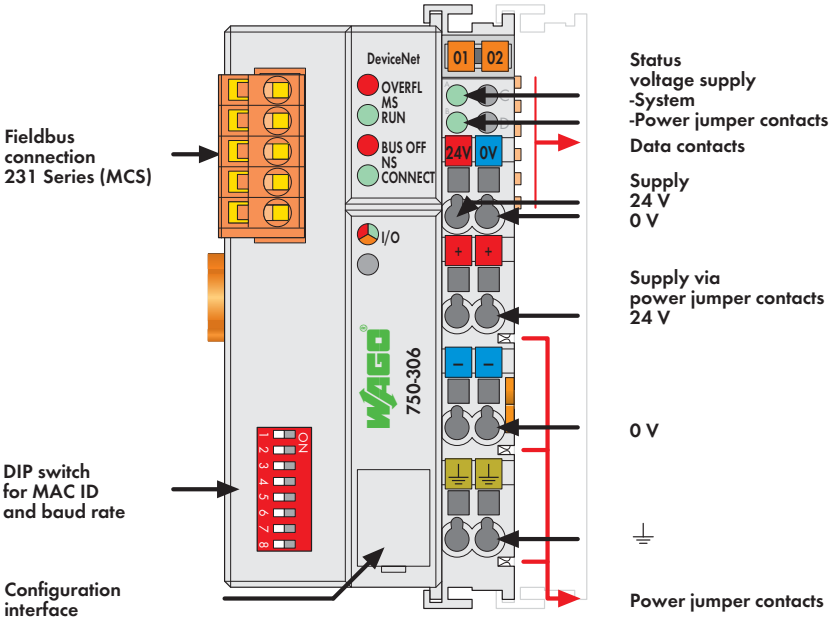

This buscoupler connects the WAGO-I/O-SYSTEM as a slave to the Device**Net**™ fieldbus.

The buscoupler automatically configures, creating a local process image which may include analog, digital or specialty modules. Analog and specialty module data is sent via words and/or bytes, digital data is sent bit by bit.

Device**Net**™ stores the process image in the corresponding Master control (PLC, PC or NC).

Notice: EDS files required

The local process image is divided into two data zones containing the data received and the data to be sent. The process data can be sent via the Device**Net**™ fieldbus to the PLC, PC or NC for further processing, and received from the field via Device**Net**™.

The data of the analog modules is stored in the process image which is created automatically according to the order in which the modules are connected to the buscoupler. The bits of the digital modules are sent byte by byte and added to the analog data. If the amount of digital information exceeds 8 bits, the buscoupler automatically starts with a new byte.

Description	Item No.	Pack. Unit
DeviceNet, w/ status byte	**750-306**	1
DeviceNet (only function with digital modules)	**750-306/000-005**	1
DeviceNet (without buskoppler status byte)	**750-306/000-006**	1

Accessories		Item No.	Pack. Unit
EDS files	Download: www.wago.com		
Miniature WSB Quick marking system			
	plain	**248-501**	5
	with marking	see Section 11	

Approvals	
Certification	ODVA
Conformity marking	CE
Korea Certification	K
Marine applications (versions upon request)	ABS, BV, DNV, GL, KR, LR, NKK, PRS, RINA
UL 508	
ANSI/ISA 12.12.01	Class I, Div. 2, Grp. ABCD, T4
TÜV 07 ATEX 554086 X	I M2 Ex d I Mb,
	II 3 G Ex nA IIC T4 Gc,
	II 3 D Ex tc IIIC T135°C Dc
IECEx TUN 09.0001 X	Ex d I Mb,
	Ex nA IIC T4 Gc,
	Ex tc IIIC T135°C Dc

System Data	
No. of couplers connected to Master	64 with scanner
Max. no. of I/O points	approx. 6000 (depends on master)
Transmission medium	Shielded Cu cable Trunk line:
	2 x 0.82 mm² + 2 x 1.7 mm²
	Drop line: 2 x 0.2 mm² + 2 x 0.32 mm²
Max. length of bus line	100 m ... 500 m
	(depends on baud rate/cable)
Baud rate	125 Kbaud, 250 Kbaud, 500 Kbaud
Buscoupler connection	5-pole male connector, 231 Series (MCS),
	female connector 231-305/ 010-000/
	050-000 (included)

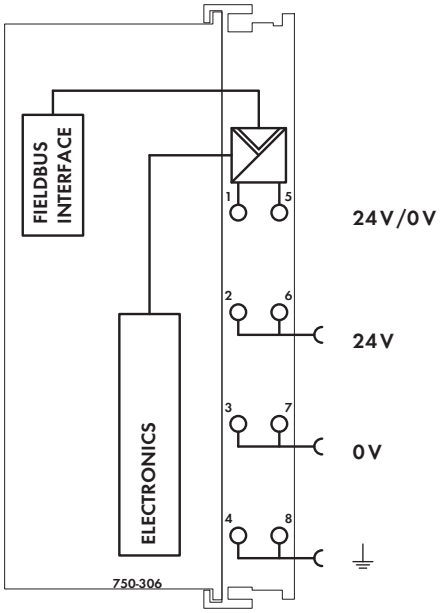

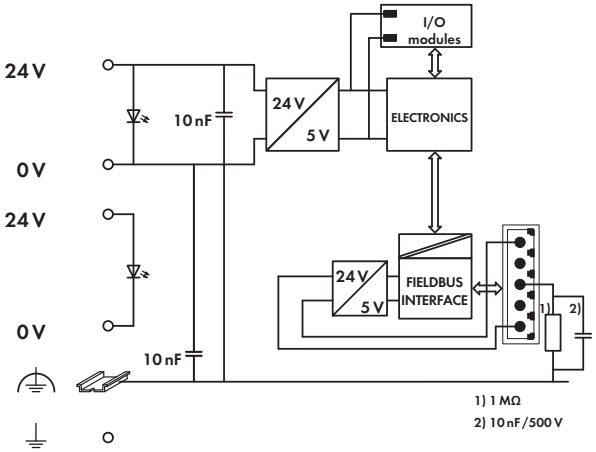

Technical Data

Number of I/O modules	64
Max. input process image	512 bytes
Max. output process image	512 bytes
Configuration	via PC or PLC
DeviceNet features	Polled I/O message connection
	Strobed I/O message connection
	Change of state
	Cyclic message connection
	Group 2 only, slave
Power supply	24 V DC (-25 % ... +30 %)
Current consumption	
via power supply terminal	< 500 mA / 24 V
via DeviceNet interface	< 120 mA / 11 V
Power supply efficiency	87 %
Internal current consumption (5 V)	350 mA
Total current for I/O modules (5 V)	1650 mA
Isolation	500 V system/supply
Voltage via power jumper contacts	24 V DC (-25 % ... +30 %)
Current via power jumper contacts (max.)	10 A DC

General Specifications

Operating temperature	0 °C ... +55 °C
Wire connection	CAGE CLAMP®
Cross sections	0.08 mm² ... 2.5 mm² / AWG 28 ... 14
Strip lengths	8 ... 9 mm / 0.33 in
Dimensions (mm) W x H x L	51 x 65 x 100
	Height from upper-edge of DIN 35 rail
Weight	200 g
Storage temperature	-25 °C ... +85 °C
Relative air humidity (no condensation)	95 %
Vibration resistance	acc. to IEC 60068-2-6
Shock resistance	acc. to IEC 60068-2-27
Degree of protection	IP20
EMC immunity of interference	acc. to EN 61000-6-2, marine applications
EMC emission of interference	acc. to EN 61000-6-4, marine applications